PRODUCT DATA SHEET

VITESS.2000 camlock cylinder (lever cylinder) 456-H24

SKU AB.V2000.BK.456-H24
Producer No. V2L456-H24

The Vitess system combines legal copy protection (patent term until 2034), unlimited trademark protection with high technical copy protection. It has been further developed on the basis of the proven V14 system.
The integrated Intop system, a special test unit in the cylinder and on the key, as well as the multiple paracentric contour profile also guarantee effective protection against tampering with the cylinder and illegal key copies. In addition, the Vitess system can be expanded at any time and leaves you free to make changes at a later date.

The Vitess.2000 system offers tailor-made security solutions for individual applications ranging from individual locks to complex systems.

DIN EN 1303 | DIN 18252

Measurements

- installation depth: 34,7 mm
- body length: 26,9 mm
- clamping dimension (closing lever L22): 11,45 mm
- mounting hole: Ø 23,5 mm lateral reduced to 19,3 mm

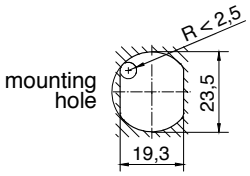

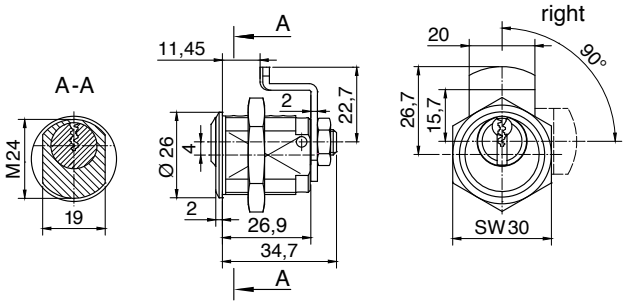

Technical characteristics

- second system level in Vitess
- Intop system for high technical copy protection
- conventional 6-pin locking system
- 6 spring-loaded locking elements and up to 4 coding pins on two locking rows
- coded profile rib with profile sensing pin
- angled paracentric precision contour (picking protection)
- standard drilling protection BS01 made of hardened special steel
- 14 mm core diameter
- locking path: 90°, lever adjustable by 360 degrees in steps of 45 degrees each, 45° grid adjustable
- according to DIN 18252 and DIN EN 1303, certified according to ISO 9001:2008
- can be combined with Vitess.1000

Execution

- cylinder body: nickel plated brass
- stable key with vertical, easy key insertion
- key can only be removed in locked position
- combination with electronic systems possible at any time

Options / Special equipment

- different lever variants (standard: closing lever L22B)
- always indicate the desired locking path when ordering!

Locking paths

- locking path 90°, right turning
- locking path 90°, left turning

Operational area

- letterboxes, wardrobe cabinets, safes, light poles or inspection flaps

Scope of delivery

- camlock cylinder (lever cylinder) 456-H24 incl. 3 or more keys
- closing lever
- Security card

Key

- key thickness: 2,6 mm
- stable serrated key made of wear-resistant nickel silver
- highest key copy protection through Intop system
- plastic key caps (COMBICAP, SKUNI and SKKR)
- on request with integrated transponder for the control of electronic systems (compatible only with COMBICAP and SKUNI key, later retrofitting only with COMBICAP)

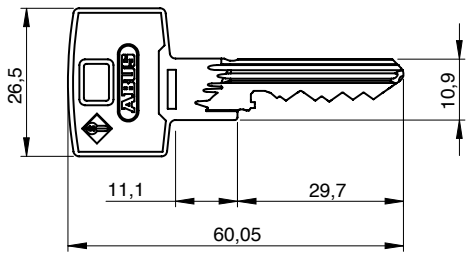

Key cap SKUNI

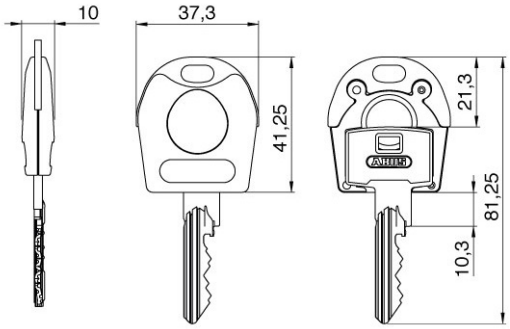

- key caps without transponder
- key caps made of plastic with metal reinforcement made of nickel silver
- for special design requirements for the keys
- for easy optical differentiation
- increased locking comfort due to enlarged key head
- subsequent opening of the key cap as well as retrofitting or replacement is not possible
- the key cap is mounted using an ultrasonic welding process, so factory assembly is absolutely necessary
- on request with integrated transponder to control external systems such as time recording, parking management systems or cashless accounting systems
- use exclusively with keys from ABUS Pfaffenhain
- combination with electronics

Key cap COMBICAP

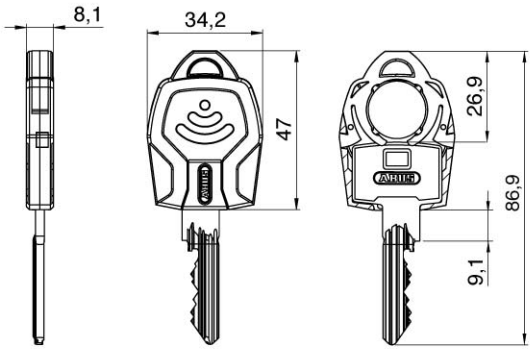

- key caps without transponder
- retrofittable plastic key cap for all mechanical keys of ABUS locking systems (no factory installation)
- coloured and numbered key cap for easy optical differentiation of keys
- increased locking comfort due to enlarged key head
- COMBICAP enables the combination of mechanical and electronic cylinders in a locking system as well as the retrofitting of electronics
- transponder can be optionally integrated for the control of electronic systems such as time recording, parking management systems, alarm systems or cashless accounting systems
- integration of up to two transponders for different electronic functions, e.g. access control and payment function
- use exclusively with keys from ABUS Pfaffenhain
- combination with electronics

Combination with electronics

In an ABUS locking system, mechanical and electronic locking cylinders can be flexibly combined at any time - either directly ex works or later in retrofitting. This potential for expansion allows you maximum flexibility and future-proofing when planning your building security. With the combination keys you can lock mechanical and electronic cylinders with just one key. Alarm systems, external systems or time recording and payment terminals can be integrated into the locking system at any time.

Thanks to COMBICAP and SKUNI CAP, combination with electronic systems is very easy. The key can be supplied directly from the factory as a mechanical-electronic combination key. Later retrofitting of electronic components is only possible with the COMBICAP.

Technical details

The patented Intop system

The Intop system is a newly developed test unit on the key and in the cylinder, which prevents the locking process with an unauthorised key. In combination with the coded profile rib and the multiple paracentric precision profile, it offers you effective protection against illegal key copying and tampering with the door lock.

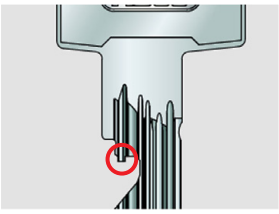

Intop system

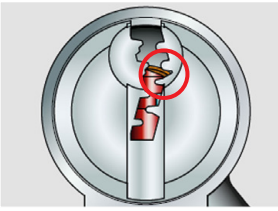

Paracentric contour profile

Intop test unit on key and in cylinder

Security options

Increased drilling protection BS01 (standard)

The drilling protection is achieved by using two additional hardened steel pins (the first and third pair of pins) in the cylinder core and body on each locking side (for double cylinders generally on both sides). This achieves the attack resistance class 2 according to EN 1303 and makes violent opening attempts more difficult.

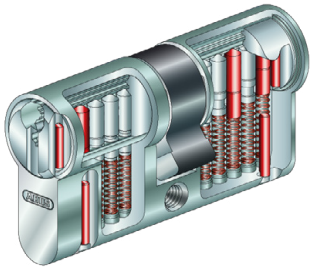

Drilling protection BS01

Technologiepark Freital F2
Döhlener Gewerbering 11
01705 Freital

Tel.: +49 351 850 71 000
Fax: +49 351 413 92 595

www.sullus.com
info@sullus.com