PRODUCT DATA SHEET

sullus security systems

EVVA access to security

4KS double cylinder short

SKU EV.4KS.DZ.KL
Producer No. 4KS DZ SYMO 27/36

EVVA 4KS (4 Curve System) is the most resistant system among mechanical locking systems. With its patented springless curve technology, 4KS is suitable for the toughest applications such as high up in the mountains or in production plants with high levels of dirt. The reversible key offers a comfortable insertion behaviour and turns easily and quietly in the cylinder. Of course, 4KS also has an EVVA-own feature: the overlapping curve milling. This guarantees maximum security and prevents key manipulation within the locking system.

The patented reversible key system is suitable for highly complex structured locking systems.

Basic length

- from 27/36 mm
- max. up to 27/71 mm
- measured from the middle of cam
- extension in 5 mm steps

Technical characteristics

- modular design (SYMO)
- springless technology
- locking authorisation query in at least 18 query positions (authorisation positions)
- 12 springless, massive locking pins are brought into a specific position via positive control of the six key curves and scanned by 2 control bars
- locking bar in the core controls the additional coding of the key
- carbide drill protection in core and body
- picking and scanning protection
- impact key protection
- pulling protection through chrome-nickel connecting axle
- cam movement 360 degrees, cam removal position 30 degrees (from the short side)
- width of cam: 9,3 mm
- certified according to DIN EN 1303:2015 160B0C6D
- further certifications on request: VdS, SKG
- patent protection until 2035

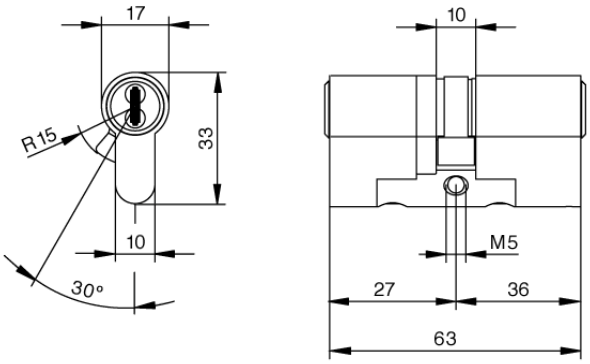

Execution

- reversible key system
- vertical, easy key insertion
- cylinder body: brass matt nickel plated, cylinder core: base material nickel silver
- slide coating of all locking elements
- combination with electronic locking system possible

Options / Special equipment

- different cylinder finishes *
- weather protection *
- seawater version *

Operational area

- front doors, connecting doors, office doors, interior doors, exterior doors, apartment doors, gates, wooden doors, aluminium doors, etc.
- for tubular frame door or full leaf door, security doors
- very large properties with a complex locking system structure and a large number of different user groups (EVVA's extensive expansion capability is included in the planning)
- industrial enterprises, universities, large retail chains
- cultural and leisure facilities

Scope of delivery

- double cylinder short incl. 3 or more keys
- fixing screw M5
- Security card

Key

- key thickness: 2,2 mm
- reversible key made of special resistant nickel silver alloy
- more stable and ergonomic due to the new bow shape
- more compact due to shortened key tip
- highest wear resistance
- overlapping curve milling protects against key manipulation and ensures maximum safety
- easy key insertion through uniquely rounded key tip
- optional: key with design cap *, key with coloured dot *, key with extended key neck *
- the original 4KS key is produced exclusively by EVVA and is only available from an EVVA partner.
- The fourth hidden curve: One of the three curves on one side runs asymmetrically on the other side. It is the hidden fourth curve that gives the 4KS its name.

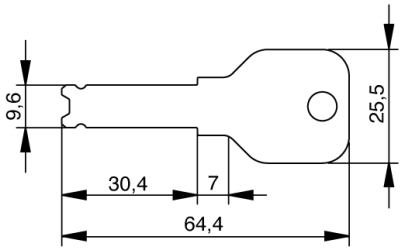

Key with design cap

- colours: black, blue and red, yellow, green and white
- material thickness design cap: 7,2 mm
- plastic caps for special design requirements for the keys
- ergonomic design and high quality for better haptics
- easy optical differentiation
- simple management of locking systems through colour assignment
- consecutive numbering of the key (key with the same locking authorisation receives a consecutive number)
- use exclusively for EVVA keys
- factory assembly, subsequent opening and retrofitting is not possible

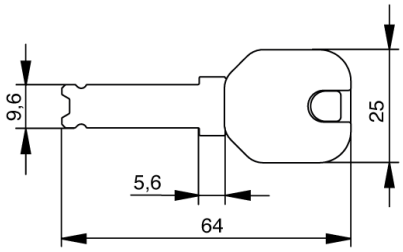

Key with coloured dot

- colours: red, blue, green, yellow, brown, black, violet, pink
- with countersunk colour dot on the key neck
- for optical differentiation
- colour dot may differ from the image on the website

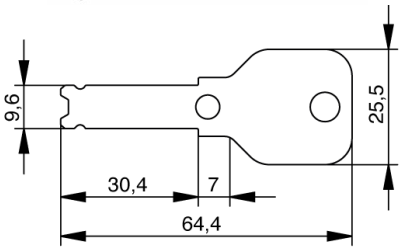

Key with extended key neck

- specially shaped key
- for use with armoured fittings

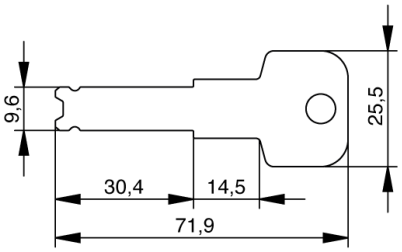

Technical details

Unlike other locking systems, the locking elements in the 4KS cylinder move along the curves on the key. They are no longer pressed against a spring force. A total of 12 springless, massive locking pins are brought into a specific position via positive control of the six key curves and scanned by two control bars. A locking bar in the core controls the additional coding of the key. In total, the 4KS key is interrogated four times. This is 3 queries more than with other systems and offers maximum security.

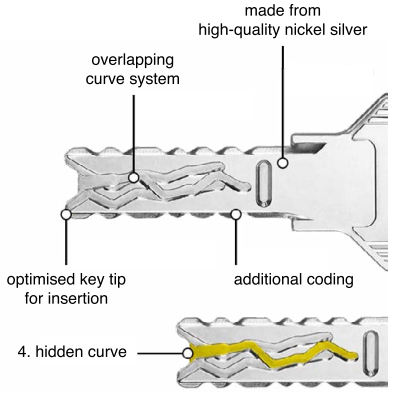

The fourth hidden curve

One of the three curves on one side runs asymmetrically on the other side. It is the hidden fourth curve that gives the 4KS its name.

Modular construction (SYMO)

The 4KS cylinder is manufactured in modular design (SYMO) and is therefore more than flexible. It can therefore be adapted to the respective door situation directly on site by a specialist dealer. It is also possible to convert the 4KS cylinder to a specific function (e.g. lockable on both sides) on site. This saves time and costs.

Locking cylinder security

The innovative technologies of the 4KS cylinder offer sustainable protection against illegal opening methods:

- **Picking and scanning protection**
  The 4KS cylinder is equipped with several locking pins. It is not possible to tell which locking pin is effective in each individual case. Due to the freely movable position of the locking elements in the core, it is almost impossible to scan a milling pattern for a duplicate key. In addition, the springless function protects against impact picking.
- **Drilling protection**
  The carbide metal side control bar, the core drilling protection and the body drilling protection in the 4KS cylinder offer effective protection against drilling.
- **Pulling and tear-off protection**
  The carbide metal side control bars and the modular design (SYMO) have a high protective effect against pulling and tear-off attempts.
- **Impact key protection**
  With this complicated opening method, burglar professionals use a so-called impact key to try to bring the query positions in the cylinder into the correct position.

* this selection extends the delivery time

Technologiepark Freital F2
Döhlener Gewerbering 11
01705 Freital

Tel.: +49 351 850 71 000
Fax: +49 351 413 92 595

www.sullus.com
info@sullus.com