PRODUCT DATA SHEET

keyTec X-tra camlock cylinder / lever cylinder

SKU WINK.XTRA.BK28
Producer No. X-tra 28

The system combines the advantages of conventional „serrated keys“, such as a wide range of key profiles and a large number of variants, with the convenience of reversible key systems.

In addition to convenient operation, the variable locking surfaces with up to 20 spring-loaded radial pins and multiple stepped calotte bores, standard drilling and pulling protection and the special convex shape of the key ensure the high security of the X-tra reversible key system.

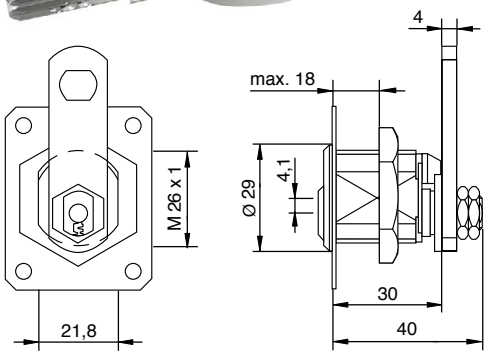

Measurements

- installation depth: 40 mm
- clamping dimension (lever H1): 30 mm
- mounting hole: Ø 26 mm lateral reduced to 22 mm

Technical characteristics

- up to 20 radially arranged locking pins in 4 rows per side
- picking protection
- high manipulation protection
- reinforced key insertion through special cylinder cores
- locking path: 90°, closing lever path: 90°
- right and left lever adjustable
- for material thicknesses up to 18 mm
- locking plate
- manufactured according to DIN 18252 and EN 1303
- patent protection until 2025

Execution

- reversible key system
- comfortable vertical key insertion
- cylinder body: nickel plated
- key can only be removed when closed
- locking by closing lever
- combination with electronics possible (mechatronic key or mechanical key with integrated transponder for the operation of electronic components double knob cylinder, access reader, door fitting

Options / Special equipment

- different closing lever variants (standard closing lever H1: A = 35 mm)
- Always indicate the desired locking path when ordering!

Operational area

- letterboxes, cupboards
- public institutions, schools, kindergartens

Scope of delivery

- camlock cylinder / lever cylinder incl. 3 or more keys
- standard closing lever H1: A = 35 mm
- mounting nut M26x1
- locking plate
- Security card

Key

- key thickness: 3,4 mm
- comfortable reversible key
- increased wear resistance due to nickel silver material
- ergonomically shaped key head for better grip
- 13,5 mm key shaft for the combination of all common safety fittings
- variable longitudinal profiles prevent the insertion of unauthorised keys
- special key tip for better insertion comfort
- key cap in different colours optionally available
- material thickness cap: 5,8 mm
- 5 intensive colours: blue, yellow, green, red, black

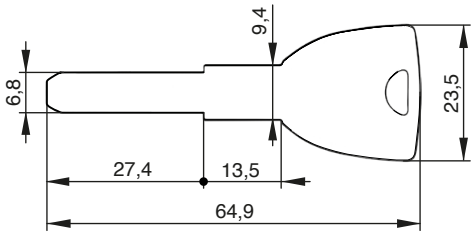

Technologiepark Freital F2
Döhlener Gewerbering 11
01705 Freital

Tel.: +49 351 850 71 000
Fax: +49 351 413 92 595

www.sullus.com
info@sullus.com